Article ID:1000-5641(2014)02-0146-11

Research on e-Textbook DRM and system implementation based on Marlin

GE Xin, QU Jin, GU jie, WANG Chang-jie

(*Philips Research China*, *Shanghai* 200233, *China*)

Abstract: With the development of e-Textbook, Digital Rights Maragement (DRM) is needed urgently. In this paper, the e-Textbook specific requirements on DRM are analyzed, and then a DRM solution is designed based on Marlin DRM SDK. A demo system is developed and the result show that the current solution can provide DRM protection to e-Textbook, while at the same time satisfied with different requirements in this new area.

Key words: e-Textbook; digital rights management; Marlin DRM

CLC number: G436 **Document code**: A **DOI**:10.3969/j.issn.1000-5641.2014.02.013

电子课本数字版权管理研究和基于 Marlin DRM 的系统实现

葛 鑫, 屈 劲, 顾 洁, 王常杰

(飞利浦中国研究院,上海 200233)

摘要: 随着电子课本的发展,该领域数字版权管理的需求日趋明显.本文分析了电子课本在数字版权管理方面的特殊需求,并基于 Marlin DRM 技术针对性的设计了一套 DRM 解决方案,开发了一套演示系统.结果显示,当前的方案可以很好地为电子课本提供版权保护,可以满足这一新兴领域的特殊需求.

关键词: 电子课本; 数字版权管理; Marlin 数字版权管理技术

0 Introduction

With the development of information technology, digitization is happening everywhere. Many kinds of content are digitized, such as audio, video and books. The industry of electronic book is boosting rapidly in the past years, while at the same time, as a special kind of e-Book used in education area, electronic textbook is raising wide attention in both academia and industry.

Copyright protection is always a question together with digitalization. This is due to

收稿日期:2013-11

通信作者:葛鑫,男,博士,飞利浦中国研究院研究员.研究方向为信息安全、数字版权管理. E-mail: essien.ge@philips.com.

the natural properties of electronic content that it is easy to copy and transmit. Almost at the same time when e-Textbook is proposed, industry is studying copyright protection method for it, while digital rights management, is a method mostly widely used.

Digital rights Management, normally abbreviated as DRM, is the technology used by copyright holders or their representative intent to control the use of digital content after sale [1]. In the history of DRM, Philips is always a key player. Philips has a lot of intelligent property in this area and is core member and key technical contributor of Marlin DRM community[2], the most widely used open standard DRM solution in the world. In China, our team did a lot of job in the DRM standardization and proposing. We are key DRM solution contributor in standardization work groups such as ChinaDRM, IGRS, GAPP e-Book and ETESBS, the corresponding areas including DRM for video, audio, e-Book and e-Textbook.

Generally speaking, DRM method should be content independent. A good DRM method for media content should be available for e-Book and e-Textbook too. However, when extended to a new area, we should analysis the new requirements so as to adjust and make the DRM solution more suitable and effective.

In this paper, we analyzed the e-Textbook specific requirements on DRM, and then designed a DRM solution based on Marlin DRM SDK (Software Development Kit). A DRM demo system is developed to validate the design. Finally some discussion are given based on the result.

1 Requirements Analysis

Digital rights management, as a widely used copyright protection tool, was designed for and mostly used in movie and television industry. The content format, use model and system framework are thus originally designed for media distribution. When extended to e-Book, the requirements differ in many areas. Besides, e-Textbook, as a special kind of e-Book that used in education area, also have significant differences comparing with e-Book.

In this paper, we compared the difference between e-Textbook and e-Book, as well as video and audio, and thus generate e-Textbook specific DRM requirements accordingly. The requirements include:

❖ Content format corresponding requirements:

- New content format supporting is needed, which means, the interface with DRM system should be defined for the format. The content format of e-Textbook is different from that of video and audio, usually a package based complex format is used, such as EPub[3] format. The different types of resources are saved as separate files and then packaged together as a ZIP file, with some XML files used to describe important information. In the following paragraph, we will discuss general DRM information needed for such kind of content format, and then give an ETB format [4] based implementation as an example.
- Content should be editable. As e-Textbook may be editable by a teacher who

what to use it in class, for example, to change the learning map, to insert some of his self-generate content or comments, or to replace some of the exercises. Besides the request for the support of the content format, this also request support of DRM system.

❖ Use Model Requirements: As a new area, the use model of DRM system may be different.

• Classroom or family based domain sharing maybe helpful. Teacher may need to share his content which all the students in class. Students may need to share the content with his parents or tutor after class. These calls for support of domain based sharing between different uses.

• Course based subscription may be helpful. When a student is taking a course, all the material of the content may be licensed to him at once, this content may then be invalid when he finished the course.

• Count based rental (Pay-Per-View) may not be suitable. It is not very easy to define time in e-Textbook area, as it takes very long time to read the whole book. Time based rental may be more suitable.

❖ Effects support :

• Rich media support. Unlike traditional e-Book, as e-Textbook is used in education area, rich media support may be needed. Video and audio content can be included inside e-Textbooks to make the class more interesting and attractive, and thus to increase the learning effect of students. This raises a request for DRM system to support media content inside e-Textbook package, and able to decrypt large media content without significant time delay.

• Interactive support. Like rich media, it is also very important for an e-Textbook to support various interaction effects, such as game, quiz, etc. This also raises new challenge for DRM, such as to support executive content like JavaScript in HTML5.

2 DRM System Design

2.1 Marlin DRM

There are mainly two kinds of DRM solutions. One kind is private solutions provided by some companies, such as Microsoft Windows Media DRM, Apple FairPlay and Adobe DRM. There are only interfaces opened to public for these solutions, no detailed information are available. As a result, we cannot use these solutions to new areas unless cooperate with the solution provider. Another kind of DRM solution is open standard solutions, mainly including Marlin DRM and OMA (Open Mobile Alliance) DRM, which has all technology details standardized and opened, and thus suitable for our research. Comparing to OMA, Marlin has much more market adoption and is very flexible and thus easy to be fitted into a new area. According to the requirements analyzed in section 1, we chose Marlin DRM to realize a DRM solution for e-Textbook.

Marlin DRM is an open-standard content protection method which was developed by

five companies—Intertrust, Panasonic, Philips, Samsung and Sony since 2005. Marlin technology is consumer electronics and mobile friendly, compatible with all popular operating systems, platforms, codecs, file formats, and delivery systems. The technology is easy to configure and implement on multiple server and client platforms. Marlin supports various content distribution models like download, streaming,and broadcast, supports various use models like purchase-to-own, pay-per-view, rental, and subscribe, supports various DRM concept like domain and super-distribution.

At the center of Marlin, Octopus DRM Toolkit [5] is used to provide core right management solution. Octopus provides a Node-Link topology to describe different entity or concept in the content distribution ecosystem, thus make the system flexible and easy to expand in use model. A virtual machine based right management system is more flexible and powerful than the Right Expression Language (REL) that is restricted by Right Data Dictionary (RDD) [6-7]. Besides, the NEMO (Networked Environment Media Orchestration) [8] secure DRM protocol provides secured communication between DRM server and client.

Marlin not only provides an end-to-end DRM specification, but also provides DRM SDK so that it can be easily implemented. The Marlin DRM SDK is composed of a DRM server application called Bluewhale and a DRM client SDK called Sushi. In this paper, we developed a DRM demo system based on the SDK. At implementation level, the Marlin DRM SDK not only realized the whole security solutions defined by Marlin specification, but also utilized a lot of security technology to increase content security, such as using the white encryption technology to increase the run-time security.

2.2　Key technology

2.2.1　Content format and DRM interface

For content protected by DRM system, interface with DRM system should be defined. According to a given content file, the information below may be defined and included inside the content.

- License corresponding information: the license request information or the license itself should be included in the content, then the DRM client can get license and use the content under the governance of the license.
- Encryption information: content encryption information should be included. For example, whether content is encrypted, which part of content are encrypted (for complex file format like EPUB), the content ID, the encryption algorithm, etc.
- Other security information: Other security information may be needed in some cases, such as digital signature to make sure of the content integrity.

In this paper, we designed the e-Textbook DRM solution based on the ETB (E-Textbook) format defined by ETESBS (E-Textbook and E-Schoolbag standardization) work group in e-Textbook content format specification [4]. The e-Textbook content format uses EPUB content package as the basic structure, and uses SCORM (Sharable Content Object

Reference Model)[9] content package as sub structure. Thus we defined the ETB DRM interface based on the EPUB interface defined by Marlin EPUB extension specification[10].

Fig. 1 gives the encrypted content package for e-Textbook. The rights.xml file defines the information to acquire license, it should include a <RightsIssuer> elements under a <RightsURL> element, where the Right Issuer URL is included. Below gives an example:

```
<Marlin xmlns="http://marlin-drm.com/epub">
    <Version>1.0</Version>
        <RightsURL>
            <Rightslssuer>
            <URL>http://www.xyz.com/book/get-
                token? cid=8A9CF56D</URL>
        </Rightslssuer>
    </RightsURL>
</Marlin>
```

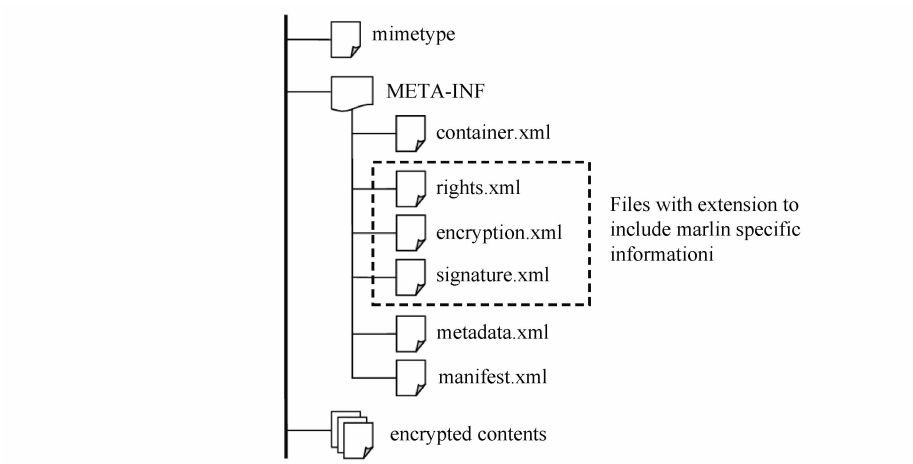

Fig. 1 Encrypted content package[10]

In the encryption.xml file one or more <enc:EncryptedData> elements should be included, each describes encryption information for one or a group of resource files. The Encryption algorithm is defined in <enc:EncrytionMethod> element, the content ID is defined in <ds:KeyInfo> element, while the resource file corresponding is defined in the <enc:CipherData> element. Below is an example:

```
<encryption xmlns="urn:oasis:names:tc:opendocument:xmlns:container"
xmlns:enc=http://www.w3.org/2001/04/xmlenc#
xmlns:ds="http://www.w3.org/2000/09/xmldsig#">
    <enc:EncryptionData ld="ED1"
```

```
<enc:EncryptionMethod
Algorithm="http://www.w3.org/2001/04/xmlenc#aes128-cdc"/>
<ds:KeyInfo>
<ds:KeyName>urn:marlin:organization:xyz:1234:content-b-
0:001</ds:KeyName>
</ds:KeyInfo>
<enc:CipherData>
<enc:CipherReference URL="OEBPS/book.html"/>
</enc:CipherData>
</enc:EncryptedData>
</encryption>
```

The Signature.xml file may be used if content integrity should be guaranteed.

Resource inside the content package should be encrypted separately. The system administer can decide detailed encryption profile, for example, which file should be encrypted, should they all encrypted using one same key or different keys. Edit of the package may not affect the DRM operation.

There are two kinds of encryption method for the resources. Generic File Encryption MAY apply to any type of resources in the package, when the encryption is performed on a per file basis. PDCF encryption may be used for media files which make it able to be decrypted package by package. This is especially suitable for large video content.

2.2.2　Use model realization

A traditional domain in the DRM area is user based, that is, one user can have a set of devices and can play the content on all of the contents he has. For classroom or family based sharing, a new kind domain may be need, in which several users can be associated within one-domain, and share contents. Marlin DRM supports such a kind of domain called Shared Domain [11]. Fig. 2 gives a comparison between the different topology of the traditional domain and the Marlin Shared. By using Shared domain, a teacher can share the e-Textbooks he has with students in the classroom. A student can also share his e-Textbook with his parents or tutor after class for coaching. This greatly increases the user experience of the e-Textbook system.

When a student is involved in a course, he may need a set of e-Textbook as well as supplementary materials. The materials may be licensed to a user as a bundle. In Marlin, a subscription concept is proposed. The user can request a subscription node, different content belong to the subscription can be licensed according to the subscription node and thus be available together. The subscription node has a valid date, which can be set according to the course end time. When the course is finished, the subscription node is out-of-date, and then all the content associated with subscription node are no longer valid. The Subscription concept in DRM system can make this use cases much more convenient.

2.2.3　Interactive and rich media support

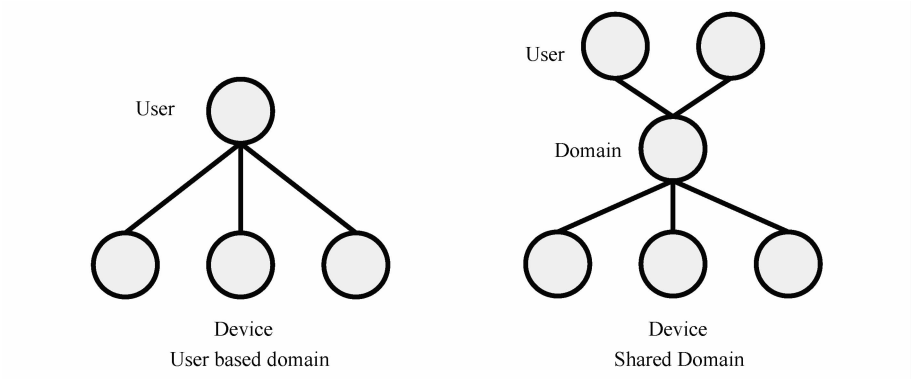

Fig. 2 Traditional domain and Shared domain

HTML5, the new version of HTML, which has a lot of revolutionary change in supporting of interactive and rich media content, is very suitable to use as content file in e-Textbook package. The e-Textbook content we used was developed based on HTML5, so it is very important our DRM solution should support HTML5. At present, Google Chrome is the best browser to support HTML5, so we developed our DRM demo based on Chrome Embedded Framework, a Web browser library based on the Google Chromium project. Encrypted content was decrypted using Sushi SDK and cached in the memory. Then the plain text content was parsed and rendered. As a result, all HTML5 effect support by chrome can be supported, including HTML5 based interactive, as well as audio and video.

Besides, to increase the decryption efficiency of large media content, package based decryption is used for large media content. As mentioned above, PDCF format is used to encrypt audio and video content. Thus, the content can be decrypted package by package, and the decrypt and display efficiency can be greatly increased.

2.3 System implementation

Based on the key technology described above, we developed a DRM demo for e-Textbook. Fig. 3 gives a system framework for the Demo.

The system is based on C/S architecture. User can register, browse and download protected content on the server. The e-Textbook client parses the protected content, using the information inside rights.xml to acquire license and other DRM objects (e.g. Marlin Node and Link) from DRM server. Then, the DRM client evaluates the license, decrypt the content if permitted. And finally the e-Textbook client may render the content to the user.

Fig. 4 gives a system working process for the DRM part of the e-Textbook system. As shown in the figure, the process can be divided into 4 steps, as described below.

(1) Initialization: when the e-Textbook client work for the first time, the client

should firstly initialize itself, and then initialize the DRM system. The initialization of the DRM is usually called personalization, meaning make the client different from each other. During the personalization course, the general communication mechanism is established, and then the device node is established. The DRM client communicate with the DRM server to get key pairs for communication, the communication key pairs including an encryption key pair and a sign key pair. When the communication key pairs are available, DRM client using NEMO protocol to communicate with the DRM server, acquire Device Node and other DRM objects.

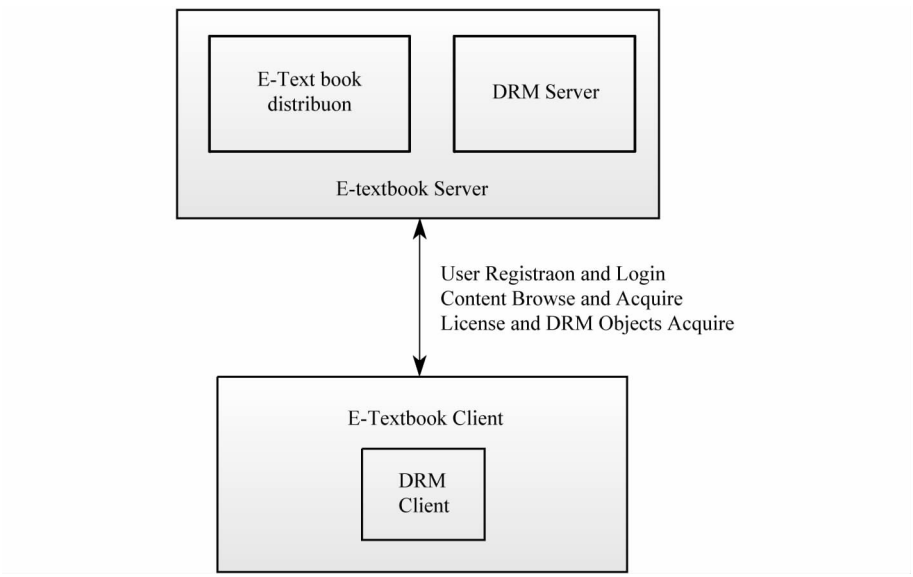

Fig. 3　e-Textbook DRM system Framework

(2) User registration: user registration in DRM system refers to acquire user corresponding DRM objects (User Node and Link Objects in Marlin DRM). During user registration, e-Textbook server should firstly issue an ActionToken to the e-Textbook client. ActionToken is a DRM operation trigger defined in Marlin DRM, which includes the operation to do, a BusinessToken of the current operation, and URL of the DRM server. Then DRM client communicate with the DRM server, request for User Node and Link according to the ActionToken. The BusinessToken is an identifier of the current operation. It should be included in the request information sent by the DRM client. When received the request, the DRM server uses the BusinessToken to check exactly the registration information of the current user, and response to the client User Node and Link accordingly, while packaged using secured format defined by Marlin DRM specification, and send through NEMO secured protocol.

(3) Buy content: User can browse and buy content on the e-Textbook website. When buying the content, e-Textbook server deliver the encrypted and packaged content to the

user. The e-Textbook client parses the content, and gets an ActionToken from the URL in rights. xml file. DRM client acquire a license from the DRM server using the ActionToken. The encrypted content key and right management information are included within the license. The DRM client guarantee that the operation of the content and the usage of the content key should follow the rules defined in the license.

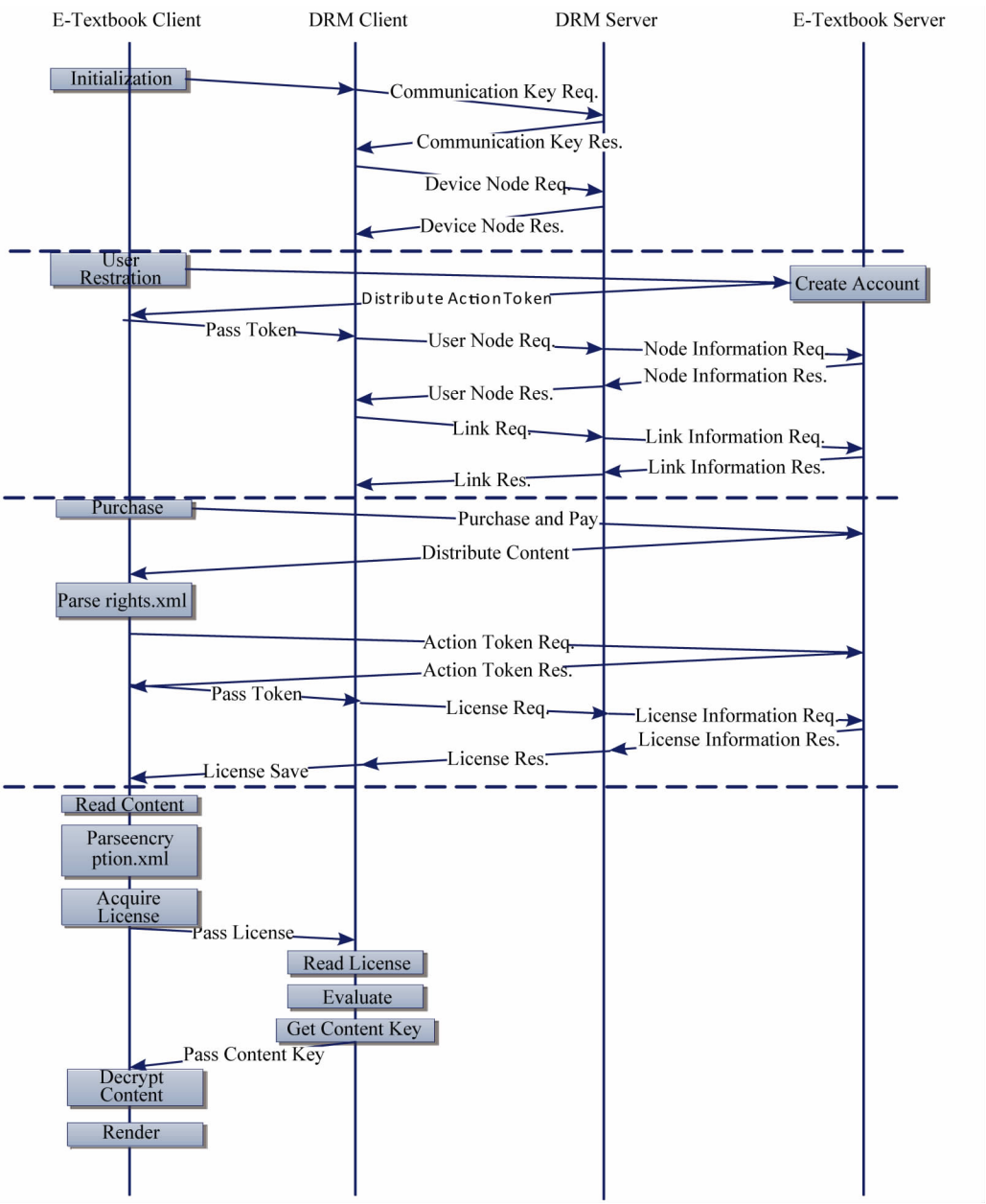

Fig. 4 DRM part working process for the e-Textbook system

(4) Reading the content: When user tries to read the content, the e-Textbook client

should firstly get the corresponding information such as content ID and encryption algorithm through the encryption. xml file, the pass the license to the DRM client according to the content ID. The DRM client evaluates the license and check if the user has the rights to use the content. During the evaluation course, the DRM clients run a group of right management code in the license to check the validity of the current operation. If the operation is valid, the DRM client can get the encrypted content key and decrypt it through a key chain. Then the e-Textbook client can decrypt the content using the content key and other corresponding information and finally render the content to the user.

Fig. 5 gives the software embodiment of the e-Textbook client. The current version of e-Textbook client runs on windows OS. The software can be divided into 3 layers. At the bottom, the infrastructure layer gives the support library of the system, within which, Sushi provides DRM functions and CEF provides HTML5 parsing, including CSS, JavaScript, video, audio and pictures. The Middleware layer realizes the basic functions model, such as DRM client, ETB format parsing, user interface and browser. At the top is the e-Textbook client application.

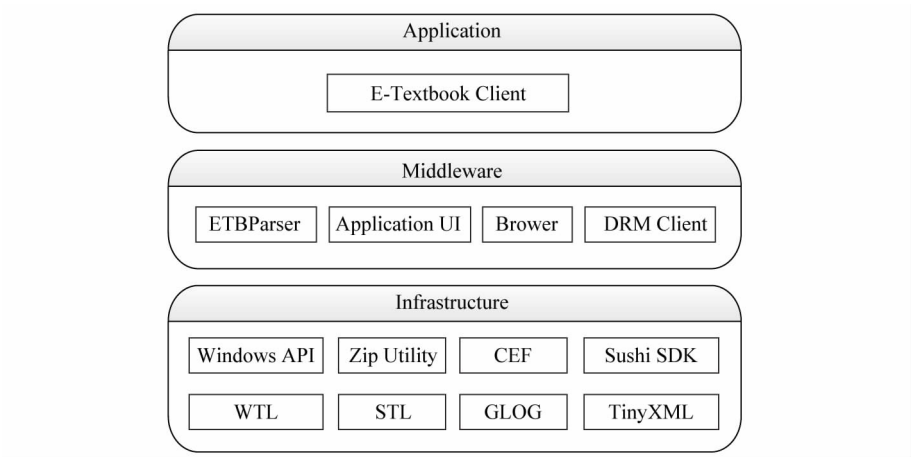

Fig. 5　e-Textbook client development

3　Results and Discussion

Fig. 6 gives some pictures of the demo system. The left above picture shows when we read the e-Textbook under protected, the interactive effect and video can be displayed as normal. The right above picture shows when the content is not valid, it is able to read. The picture at the bottom shows that we can set the license model of the content, such as license for free, purchase-to-own or rental.

Besides, the demo system development show that the DRM solution based on Marlin DRM SDK and CEF can satisfy the requirement of e-Textbook condition. The e-Textbook content is used under the governance of DRM system and according to the authorization in the license. The system can support the interactive and rich media requirements needed by

e-Textbook effectively, with no apparent effect loss and no significant time lag. Besides, the system can support different use model such as classroom sharing and course based purchase.

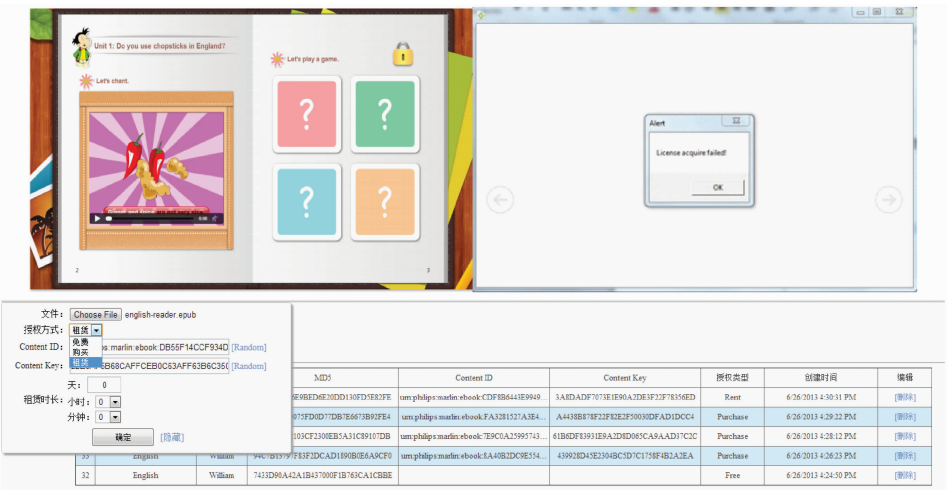

Fig. 6 DRM demo system

However, this work is just a start. Furthermore we may need to do more deeply research on e-Textbook requirements, to check whether the requirements we conclude are valid and whether there are more requirements. At the same time, we may need to evaluate the performance of the system more accurately and quantitatively during validation.

4 Conclusions

With the development of e-Textbook, DRM is needed urgently. In this paper, we analyzed the e-Textbook specific requirements on DRM, and then designed a DRM solution based on Marlin DRM SDK. A demo system is developed and the result show that the current solution can provide DRM protection to e-Textbook, while at the same time satisfied with different requirements in this new area.

[References]

[1] Wikipedia. Digtial Rights Management[EB/OL]. 2012[2014-01-07]. http://en.wikipedia.org/wiki/Digital_rights_management.

[2] Marlin Developer Community. Marlin Broadband Delivery System Specification Version 1.2.3 [S]. USA: Marlin Developer Community, 2010.

[3] IDPF. Open Packaging Format (OPF) 2.0.1 - Recommended Specification[S]. IDPF. September 4, 2010 [February 21, 2011].

[4] FU W. e-Textbook modeling and technical validation [D]. Shanghai: East China Normal University, 2013.

[5] BOCCON-GIBOD G, et al. Octopus: An Application Independent DRM Toolkit[C]. IEEE 6th Consumer Communications and Networking Conference, 2009.

[6] WANG X, et al. The MPEG-21 rights expression language and rights data dictionary[J]. IEEE Transactions on Multimedia, 2005, 3: 408-417.

(下转第 178 页)

[20] STRACKE C M. (2013). "Open Learning: The Concept for Modernizing School Education and Lifelong Learning through the Combination of Learning Innovations and Quality"; in: Stracke, Christian M. (Ed.): *Learning Innovations and Quality: The Future of Digital Resources*, Berlin: Logos. p. 15-28.

[21] STRACKE C M. (2012). "Learning Innovations and Learning Quality: Relations, Interdependences, and Future"; in: Stracke, Christian M. (Ed.): *The Future of Learning Innovations and Learning Quality. How do they fit together?*, Berlin: Gito. p. 13-25.

[22] STRACKE C M. (2010a). "Quality development and standards in learning, education, and training: adaptation model and guidelines for implementations"; in: Информатизация образования и науки [= Информике (*Informika*), ISSN 2073-7572]; Vol. 7 (3), 2010. Moscow (Russian Federation): Informika. p. 136-146.

[23] STRACKE C M. (2010b). "Quality and Standards in Learning, Education, and Training: The Adaptation Model IDEA for the Introduction of Quality Development"; in: *Proceedings of the International Conference on the Past and Future of e-Learning Standards*. Tokyo (Japan). p. 26-36.

[24] STRACKE C M. (2009). "Quality Development and Standards in e-Learning: Benefits and Guidelines for Implementations"; in: *Proceedings of the ASEM Lifelong Learning Conference: e-Learning and Workplace Learning*. Bangkok (Thailand) [online available at: http://www.qualitydevelopment.eu/docs].

[25] STRACKE C M. (2006a). Process-oriented Quality Management. In Pawlowski J. & Ehlers, U. (Eds.) *European Handbook on Quality and Standardisation in E-Learning*. Berlin: Springer, 79-96.

[26] STRACKE C M. (2006b). Interoperability and Quality Development in e-Learning. In *Proceedings of the Asia-Europe e-Learning Colloquy*. Seoul: e-ASEM [online available at: http://www.qualitydevelopment.eu/docs].

[27] THOMPSON J L, MARTIN F. (2005). *Strategic management: Awareness and change*. London: Thomson learning.

(上接第 156 页)

[7] IANNELLA R. Open Digital rights management[C]//W3C DRM Workshop,2001.

[8] BRADLEY W B, MAHER D P. The NEMO P2P service orchestration framework [C]. IEEE 37th Hawaii Annual International Conference on System Sciences,2004.

[9] BOHL O, SCHELLHASE J, SENLER R, et al. The Sharable content object reference model(SCORM)- a critical review[C]//IEEE International Conference on Computers in Education,2002:950-951.

[10] Marlin Developer Community. Marlin-EPUB Extension Specification Version 1.0[S]. USA: Marlin Developer Community, 2011(08).

[11] Marlin Developer Community. Marlin-Broadband Shared Domain Topology Specification Version 1.0[S]. USA: Marlin Developer Community, 2009(09).